Revision:	Changes:	Date:
1.0	Initial Case, PCN: RVD002-107	2026.11.18

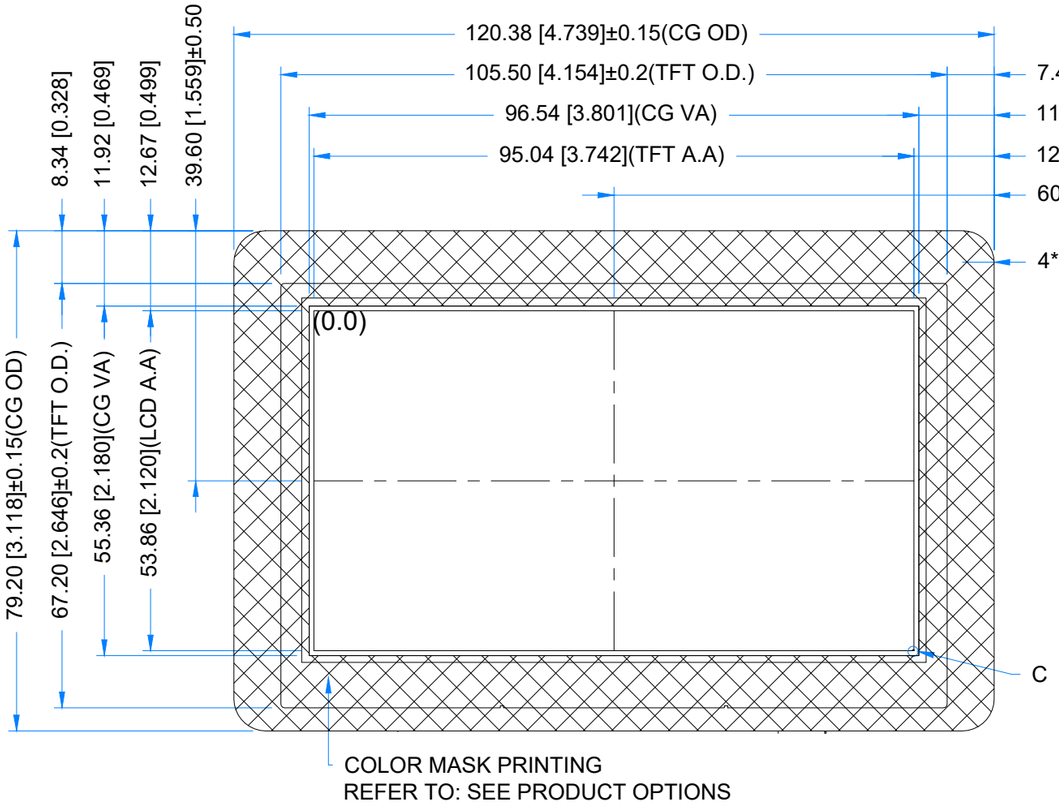

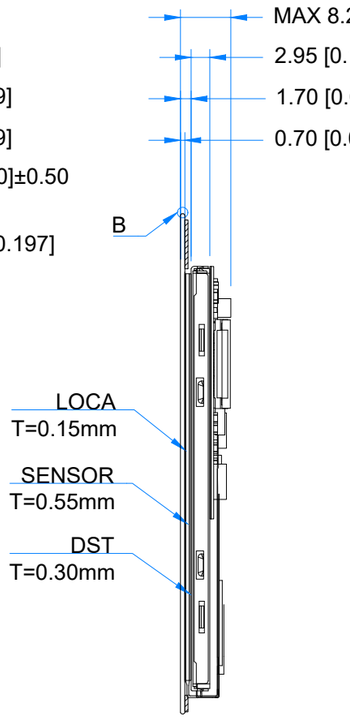

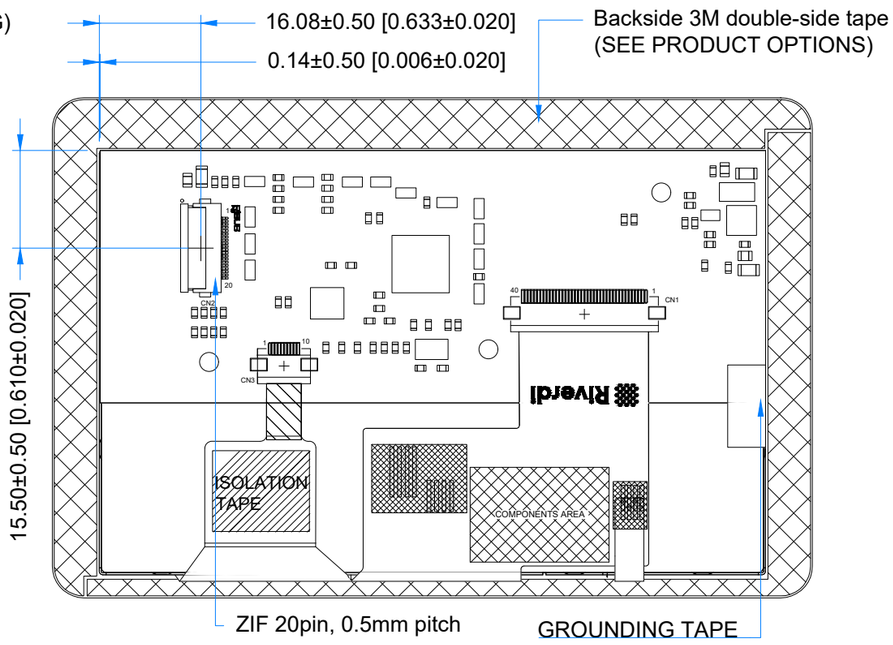

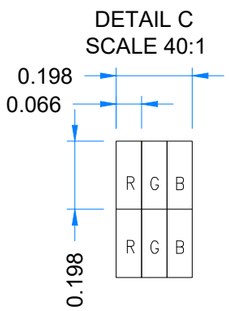

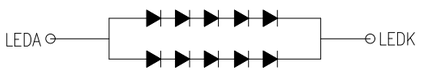

BACKLIGHT CIRCUIT DIAGRAM

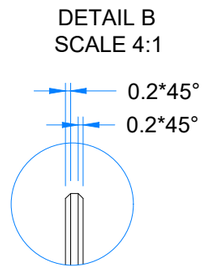

PRODUCT OPTIONS	
PN	DESCRIPTION
RVT43ULBNWC00	black cover glass, 0.2mm DST
RVT43ULBNWC01	black cover glass, 0.5 mm DST
RVT43ULBNWC02	black cover glass, no DST
RVT43ULBNWC03	white cover glass, 0.2mm DST
RVT43ULBNWC04	white cover glass, 0.5 mm DST
RVT43ULBNWC05	white cover glass, no DST

PINOUT ON THE 2ND PAGE

TFT NOTES:
1. DISPLAY TYPE: TRANSMISSIVE, NORMALLY WHITE
2. RESOLUTION: 480x272
3. VIEWING ANGLE: 12 O'CLOCK
4. INTERFACE: SPI/I2C
5. DRIVER IC ON THE BOARD: BT815
6. SUPPLY VOLTAGE FOR MODULE: 3.3V
7. SUPPLY VOLTAGE FOR BACKLIGHT: 5.0V, BUILT-IN LED DRIVER

TP NOTES:
1. TP STRUCTURE: G+G
2. CG THICKNESS: 0.70mm
3. DRIVER IC: FT5446U
4. SURFACE HARDNESS: 7H
5. INTERFACE: SPI VIA RIBUS AND BT815

GENERAL NOTES:
1. SURFACE LUMINANCE: 500cd/m^2
2. OPERATING TEMPERATURE: -20°C ~ 70°C
3. STORAGE TEMPERATURE: -30°C ~ 80°C
4. WITHOUT INDIVIDUAL TOLERANCE: ±0.3mm
5. RoHS COMPLIANT

PN: RVT43ULBNWC0X V3				
SN:				
DRAWN:	M.Stabinski	2026.11.18	1:0.97	
CHECKED:	M.Wierzbowski	2026.11.18	[mm]	
APPR:	M.Wierzbowski	2026.11.18	ISO A3	P. 1 of 1

CONNECTOR 2			
Pin No.	Desc.	Pin No.	Desc.
1	VDD	11	GPIO/IO2
2	GND	12	GPIO/IO3
3	SPI_SCLK	13	GPIO2
4	MISO/IO1	14	GPIO3
5	MISO/IO0	15	NC
6	CS	16	NC
7	INT	17	BLVDD
8	PD	18	BLVDD
9	NC	19	BLGND
10	AUTIO_OUT	20	BLGND